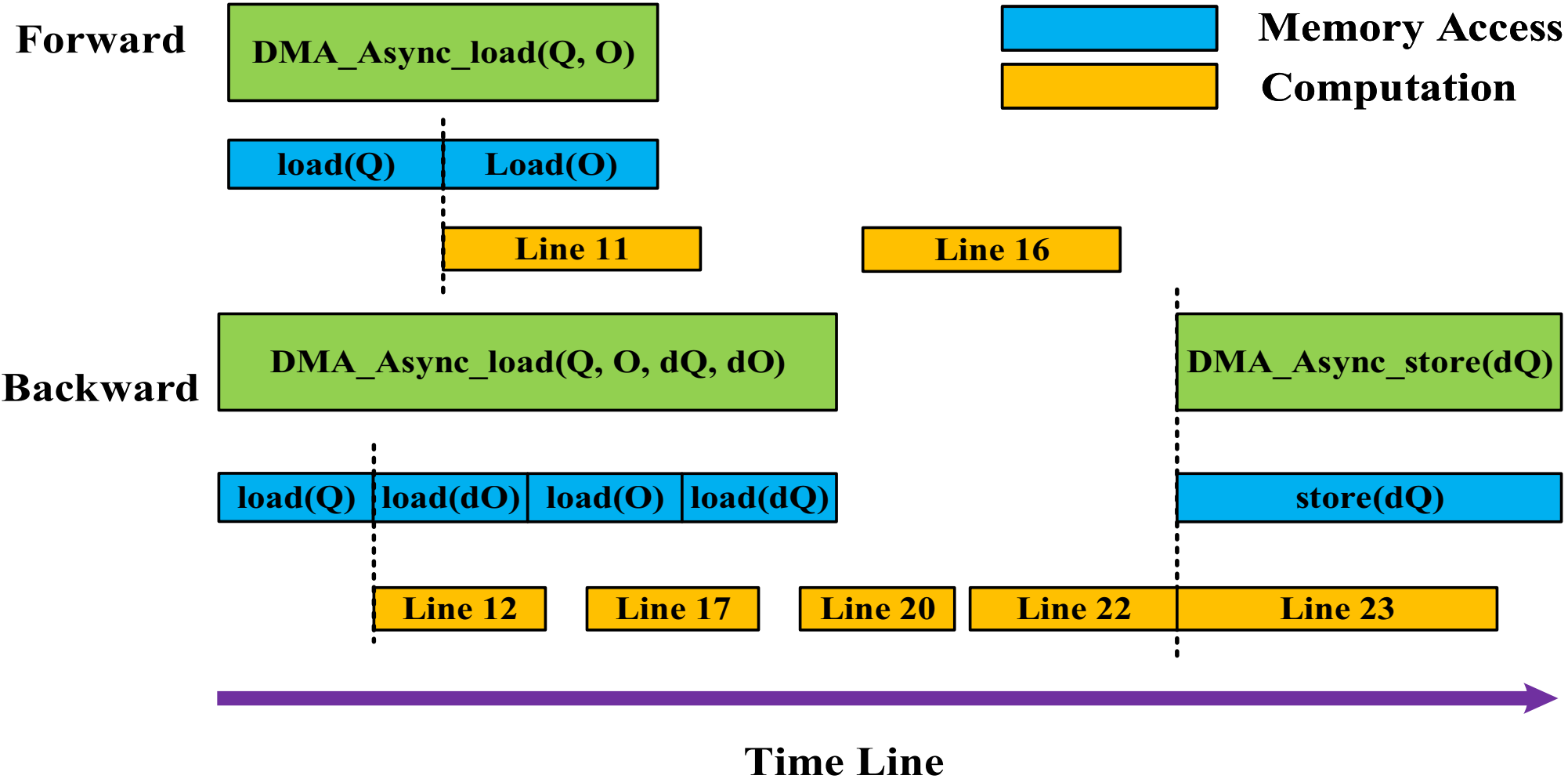
Forward
DMA_Async_load(Q, O)
Memory Access
Computation
load(Q)
Load(O)
Line 11
Line 16
Backward
DMA_Async_load(Q, O, dQ, dO)
DMA_Async_store(dQ)
load(Q)
load(dO)
load(O)
load(dQ)
store(dQ)
Line 12
Line 17
Line 20
Line 22
Line 23
Time Line